Kameo C/C Close to wall Pan

POT541KA

- Rimless design for easy cleaning
- Modern, contemporary design
- Vitreous China
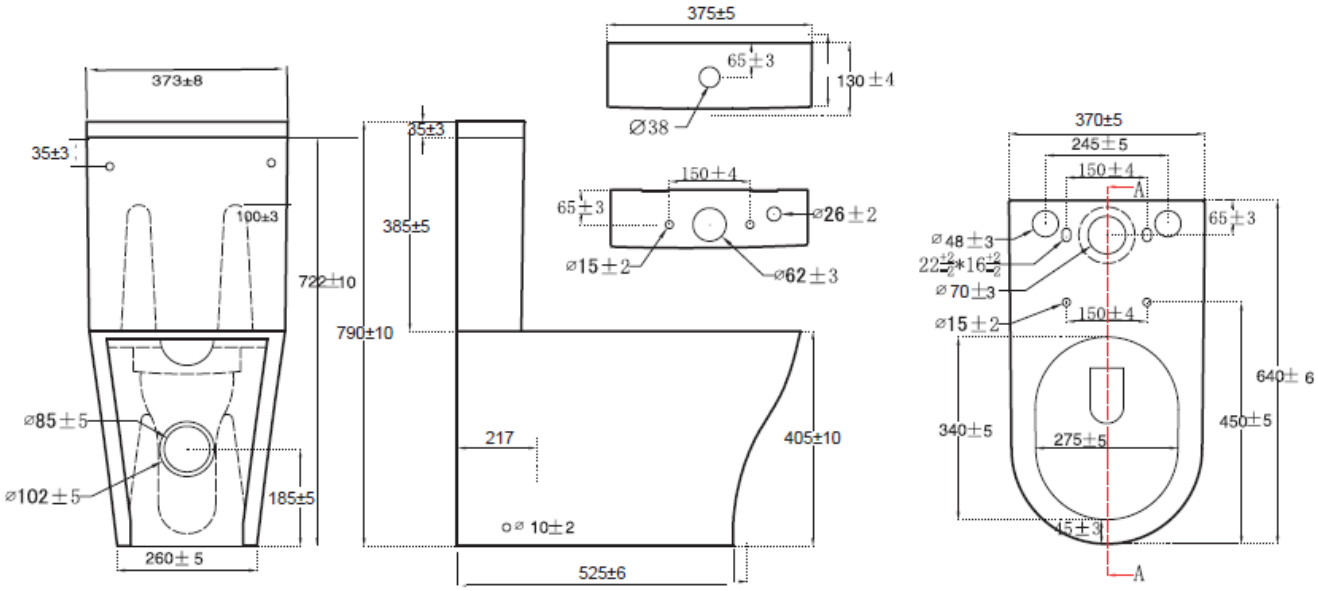
Technical drawing